TRIESKOVÉ A BEZTRIESKOVÉ OBRÁBANIE DREVA, 8(1): 131-136, 2012
Zvolen, Technická univerzita vo Zvolene, ISBN

INCREASE OF WOOD DECORATIVENESS BY THE IMPREGNATION UNDER THE ELECTRIC CURRENT INFLUENCE

Mikhael Chernykh – Eugenia Kargashina

Abstract
This article describes the way of refining common species of wood without visually expressed texture by means of deep impregnation in electric field. The given method provides material with a wide range of aesthetic properties, as well as imitation of fine wood. The regularities of impregnation processes in electric field with a filtration mechanism have been considered and the most favorable conditions for its implementation have been defined. We describe the decorative effects obtained by varying the components of the impregnating composition.

Key words: *electric current, electroosmotic effect, impregnation, texture, wood*

INTRODUCTION

Wood is one of the most widespread and popular natural materials. It has been used for hundreds of thousands of years as both fuel and construction material. The extensive use of wood can be explained by its physical and mechanical properties, good processibily, as well as effective ways of changing some properties by means of chemical and mechanical treatment (M.A. Grigoriev, 1981).

One of the progressive refinement methods is a method of deep timber staining, which enhances its aesthetic properties throughout the material.

Deep selective staining of low-grade wood with unexpressed visual texture (for exemple birch, aspen, etc.) will give the material with a wide range of decorative properties, as well as imitate some valuable species of wood.

At present, the following methods of wood finishing are used to increase the decorative properties of wood:

- Drawing some wood texture patterns of valuable species directly on the product surface;
- Pasting with wrapping paper with printed texture of valuable species of wood;
- Wood staining.

All methods of wood staining can be divided into three groups according to the applied technology and the amount of coloring matter:

- Surface staining (spraying, brushing, dipping);
- Deep staining;
- Through coloring.

Through coloring is the most promising method of achieving the aim of refining wood.

Izhevsk State Technical University 7, Studencheskaya St., Izhevsk, Russian Federation
e-mail: rid@istu.ru; e.v.kargashina@gmail.com

MATERIAL AND METHODS

Wood texture is defined as the natural pattern of material surface formed by across and along shearing (B.M. Rybin 2005, B.N. Ugolev 2004, etc.). The texture ox feel of the wood surface is the result of the difference between the dimension of the pores, and the width and quantity of rays. Timbers which have wide vessels or broad rays are coarse textured, and those with narrow vessels and with thin rays are fine textured (Lincoln, A.W. 1986). The nature of the texture depends on:

- width of annual rings and degree of color difference of early and late zones of annual ring;
- size of medullary rays;
- direction of fibers from the butt to the top, which can be straight and wavy, curly gain, clearly observed especially in fades and woodknobs;
- Centric and eccentric arrangement of growth rings in cross section;
- part of wood for cutting (stem, butt, or crotch of a large branch and trunk to sag)
- Type and angle of cut, method of producing veneer and direction of the cut during slicing wood or peeled (radial, tangential, tangentially-mechanical).

Impregnation with a filtering mechanism allows displaying common texture of low-grade wood, which is considered as unexpressed or poorly expressed. As timber vessels are outstretched along the trunk, the staining composition penetrates easily in the axial direction than in the radial and extends through the elements of the conduction system (E,V. Kargashina, M.M. Chernyh, 2010.) Development of impregnation technology by means of the filtering mechanism may replace existing methods of imitation, in such cases like manufacture of solid wood products (a picturesque way, printing, wrapping veneer and textured film materials).

The experimental complex is shown in Figure 1. AC current from source (1) passes through an isolating transformer (2) intended to improve electrical safety which provides electrical isolation of the network. By means of autotransformer (3), the input voltage is adjustable from 0 to 140 V. The voltage multiplier (4) converts AC current into DC and transforms variable voltage into continuous one so that the output voltage is 10 times higher than the input one. Readings of voltmeter (5) provide the required output voltage. Current passing through the sample is measured with amperemeter (4). The sample (8) is immersed in a container (10) with saturating composition (7), which is given a positive charge (cathode - 9).

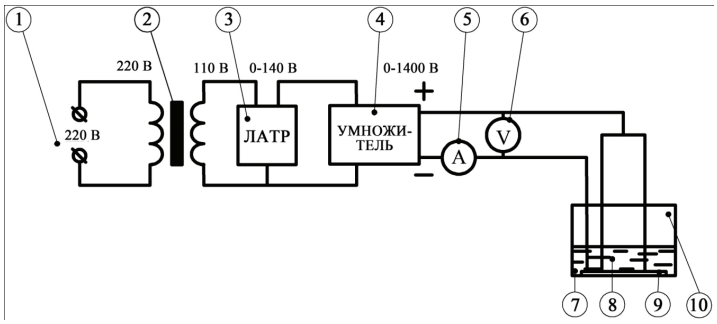

Figure 1 - Experimental complex for the impregnation under the influence of electric field: 1 - Power source: 2 - isolating transformer, 3 - autotransformer 4 - voltage multiplier, 5 - amperemeter, 6 - voltmeter, 7 - saturating composition, 8 –sample, 9 - cathode, 10 – container, 11-anode

In order to improve the contact various ways of anode fastening as well as the possibility of applying mediation materials with high conductivity (graphite and electrolyte solutions) were considered (Figure 2)

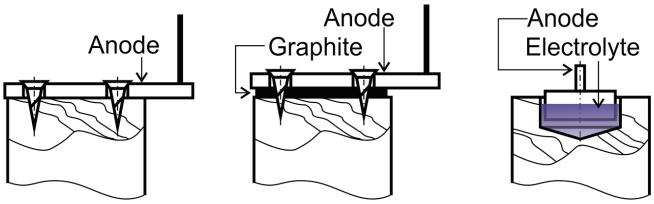

Figure 2- anode fastening methods

Different species of wood like colloidal capillary - cellular body, have different adsorption capacity, which significantly affects water permeability (V.I. Patyakin, 1990) According to the researches by N.A. Osnach, V.A. Bazhenov, E.V. Kharuk and others (N.A. Osnach 1964, V.A. Bazhenov, 1952, E.V. Kharuk, 1976) Birch belongs to the class of well-impregnated wood and according to the A.T. Vakin classification it can be applied in imitation of walnut and gray maple (A.T. Vakin, 1969). Our studies were conducted on cylindrical segments of birch logs with diameter of 50 and 70 mm and length of 200, 300 and 400 mm.

Various compositions and their mixtures were used for impregnation: 3% solutions of salts (CuSO4, FeCl3), aniline dye for fabric and water stain of TU 2388-022-32811438-99. Distilled water is used as solvent.

RESULTS AND DISCUSSION

Flow of fluid in wood may have various reasons: capillary and diffusion forces, pressure gradients, likewise electrical and thermal gradients (J.R. Collins 1954).

Impregnation of wood with the filtration mechanism based only on capillary forces and diffusion without applying pressure gradients is not effective, because along with increasing length of the sample the impregnated area decreases and tends to zero; on the one hand, it can be explained by formation of air bubbles in the vessels and system of dead-end capillaries (Jamin effect) and, on the other hand, it shows the insufficiency of impregnation forces (V.I. Patyakin, 1990) (Figure 3).

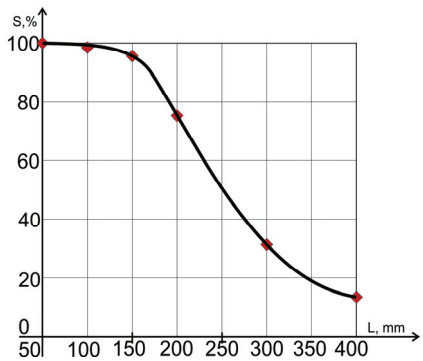

Figure 3 – Changing of impregnated area of samples with different length. Impregnation time – 4 hours

The liquid transfer in capillaries and capillary-porous bodies under the influence of external electric field is called electroosmosis (V.I. Patyakin 1990.). During electroosmosis at the point of "solid - solution" space charge localized in the liquid phase appears, its magnitude is compensated with the surface charge of the solid phase - electric double layer (EDL). The ions of the EDL diffuse part are set in motion under the influence of external electric field. In addition, water molecules in its hydrate shells are involved into the movement by moving of each ion, which, in their turn, due to the viscosity set in motion following water molecule in the pore space of the capillary-porous body. The number of cations and anions in solution are different because of the presence of space charge. Consequently, the liquid flows carried by anions and cations do not counteract with each other so a resulting flux appears which is directed to the electrode, whose charge has the same sign as the charge of the solid phase (E.A. Shneyberg 1951., V.I. Patyakin 1990.).

Application of external electric field allows to intensify the process of impregnation, to overcome the effects of restricting the penetration of staining composition into longer samples and paint them over the entire volume within a much smaller time interval (Figure 4).

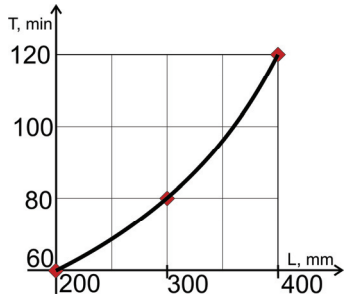

Figure 4 - Time of soaking birch wood samples of different lengths

The study has found the influence of mode of the anode attachment and the reliability of its contact with the wood on the course of the impregnation process. Impregnation will be more effective and the staining will be distributed more evenly if the contact area of anode with wood is wider. In order to get a good contact and reduce the likelihood of electrical breakdown in the area of the anode contiguity, it is proposed to use the agent materials, which provides better electroconductivity. Powdered graphite has good electrical conductivity, but clogs vessels and capillaries in the area of the anode junction, which creates additional pressure and impedes the movement of wood extracts and staining composition through the structure of wood. The best results were obtained when the electrolyte solution is used as an agent material, as in this case anode space is totally isolated from air and well moistened, so the speed of impregnation significantly increases.

The staining composition plays an important role in the impregnation under the influence of electric current with the filtration mechanism as well. First, the staining should conduct an electric current. Second, the size of the pigments (insoluble inclusions) that make up the pigment colors must not exceed the dimensions of the elements of the wood conducting system. Third, the electrode material and the impregnation composition must be chemically compatible, as sediment in the form of flakes or suspensions may lead to defects of the impregnation, or its complete stop.

Various decorative effects may be obtained because of the staining composition. A uniform color provides with compositions containing salt solutions (Figure 5 a, b, c), as their elements enter chemical interaction with wood tannins. The size of the molecule to the

pigments staining is large enough, for example, the pigments of aniline ≈ 0,42 * 10 cm (V.N. Buzzarova) therefore, even internal pressure drop is high enough, aniline particles cannot penetrate deeply into the submicroscopic cell walls system of wood, so would settle on the walls of vessels and medullary rays, and fill the intercellular spaces because of this they form a striped pattern (Figure 5, g).

Figure 5 - decorative effects, on birch wood cuts impregnated with: a) 3% solution of FeCl3; b) 3% solution of CuSO4; c) 3% solution of FeCl3 + aniline, d) aniline

CONCLUSION

The study has revealed the following features of impregnation process:

• Filtering of coloring compositions through the wood reveals the texture due to the directed flow of staining through early or late parts of the annual ring.

• Saturation of color tone depends on the duration of impregnation as well as type and concentration of the staining composition. Solutions of salts in aniline colorant produce rich wood color with an expressed texture pattern.

• The structural features of wood and its defects affect on impregnation quality; knots are not impregnated, large knots close the current flow in the solution and have an adverse effect on the uniformity of staining.

Regularity of wood impregnation with the filtration mechanism under the influence of electric current still require detailed study and consideration of possible decorative effects that will occur during impregnation with another staining compositions. The obtained results can be used in manufacture of souvenirs, interior decorations, sliced veneer for mosaics and etc.

REFERENCES

V.A. Bazhenov 1954. Liquid permeability of wood and its practical value. Moscow: publisher of the USSR. 1952. 84p.

V.N. Buzzarova Materials for Modern Medicine: Textbook, // URL: http://window.edu.ru/window / library? p_rid = 19,679

J.R. Collins 1954 Flow of Fluids Through Porous Materials. Translated from English by RL Sayganika. Under red.G.I.Barenblatta. Moscow: MIR. 1954

M.A. Grigoriev, 1981. Materials for Joiners and Carpenters. Moscow: High School. 1981. 173p.

Kargashin E., Chernyh M, 2010. Influence of impregnating wood with the use of filtering the brightness staining. St. Petersburg: Design. Material. Technology. 2010. P

E.V. Kharuk 1976 The permeability of the wood gases and liquids. Novosibirsk: Science. 1976. 190 p.

A.W. Lincoln, 1986. World Woods in Colour. New York: Macmilan publishing Company, 1986. 322 p

N. A. Osnach 1964 The permeability and conductivity of wood Moscow: Forestry. 1964. 182 p.

V.I. Patyakin 1990. Technical hydrodynamics of wood. Moscow: Forestry. 1990. 304 p.

R. Reh, 2006. Wood and Veneer Properties of a perspective Species for Central European Woodworking Industry – Red Oak *(Quercus Rubral).* Zvolen: Technical University in Zvolen, Slovakia. 2006. P. 475-479

B.M. Rybin, 2005. Technology and Equipment Protective and Decorative Coatings and Wood Materials: The textbook for high schools. - 2nd ed. Moscow: Moscow State Forest University, 2005. 486 p.

E.A. Shneyberg 1951. From the history of electroosmosis discovery. Physics-Uspekhi (Advances in Physical Sciences). Moscow: Rssiyskaya Academy of Sciences, 1951

T.A. Vakin 1969. Storage of the Roundwood. Moscow: Forest Industry. 1969. 428p.